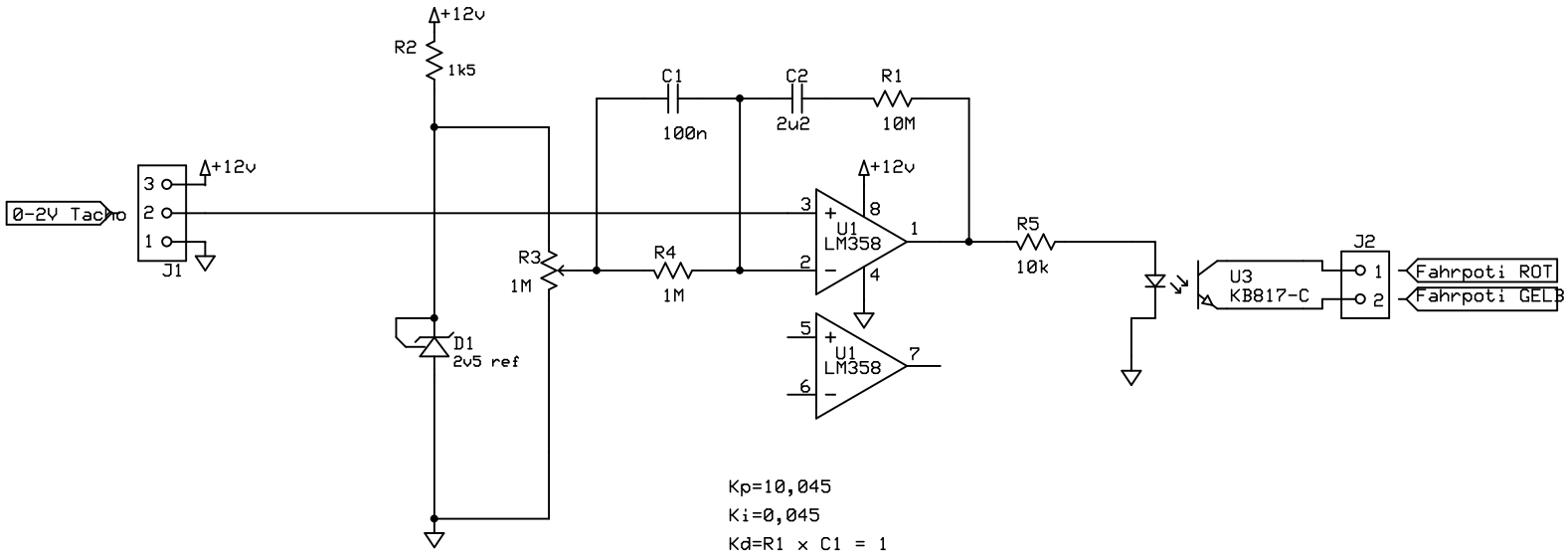

Carsten Lahme		
Cruise Control		
Carsten	Rev 0.1 14.10.2011	Page 1/1

Simulator.raw

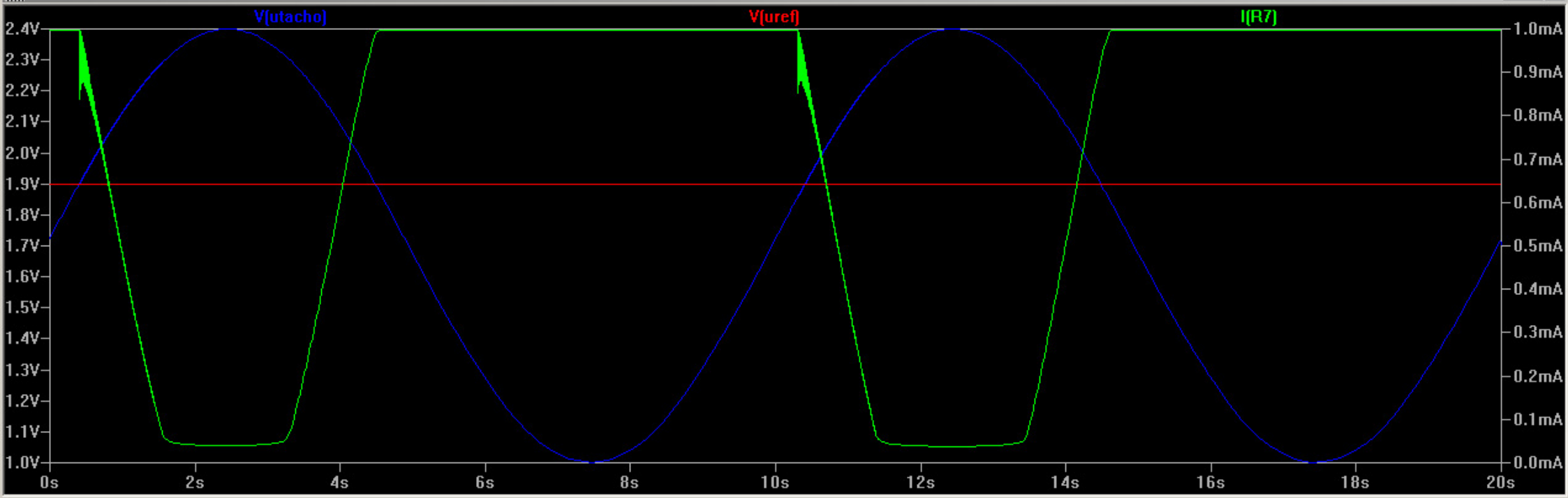
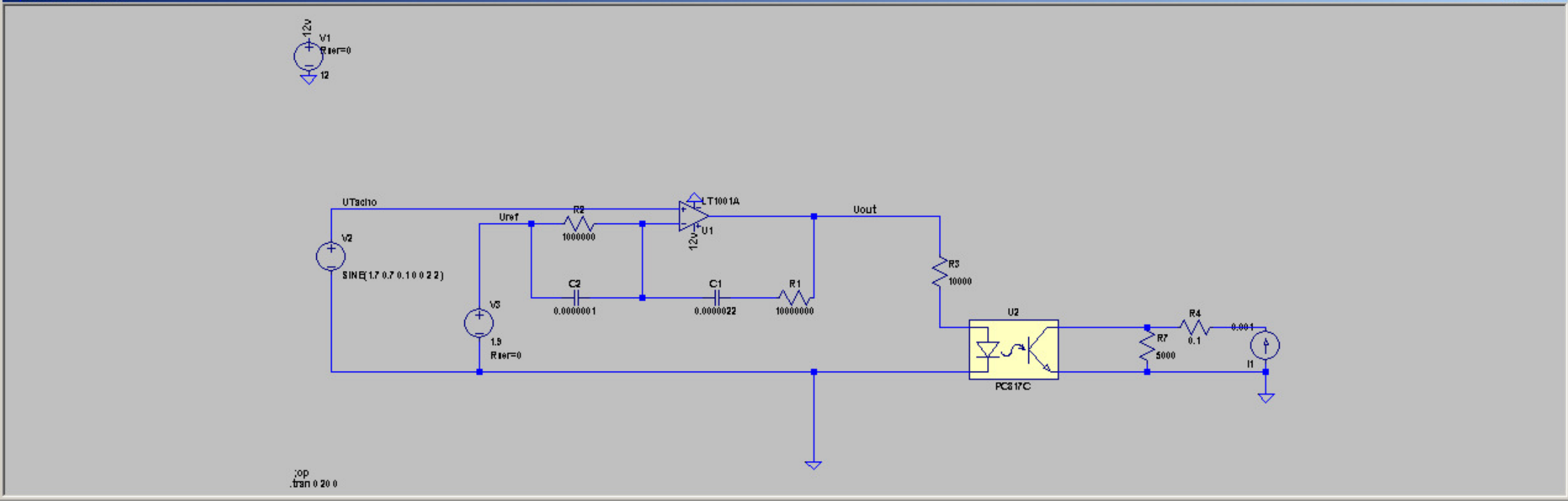
Simulator.asc